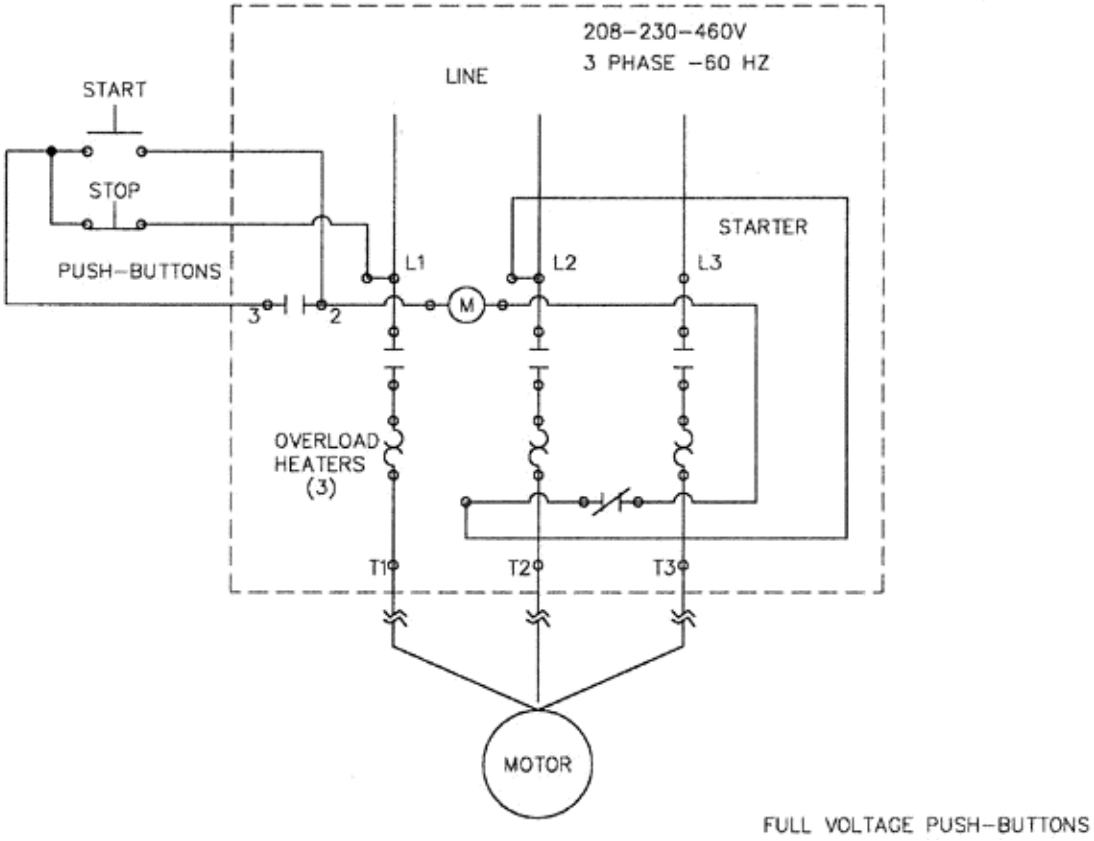Spray-Tech DK104 Mixer
Magnetic Starter